PDF-Tools Click to BUY NOW! www.pdf-xchange.com

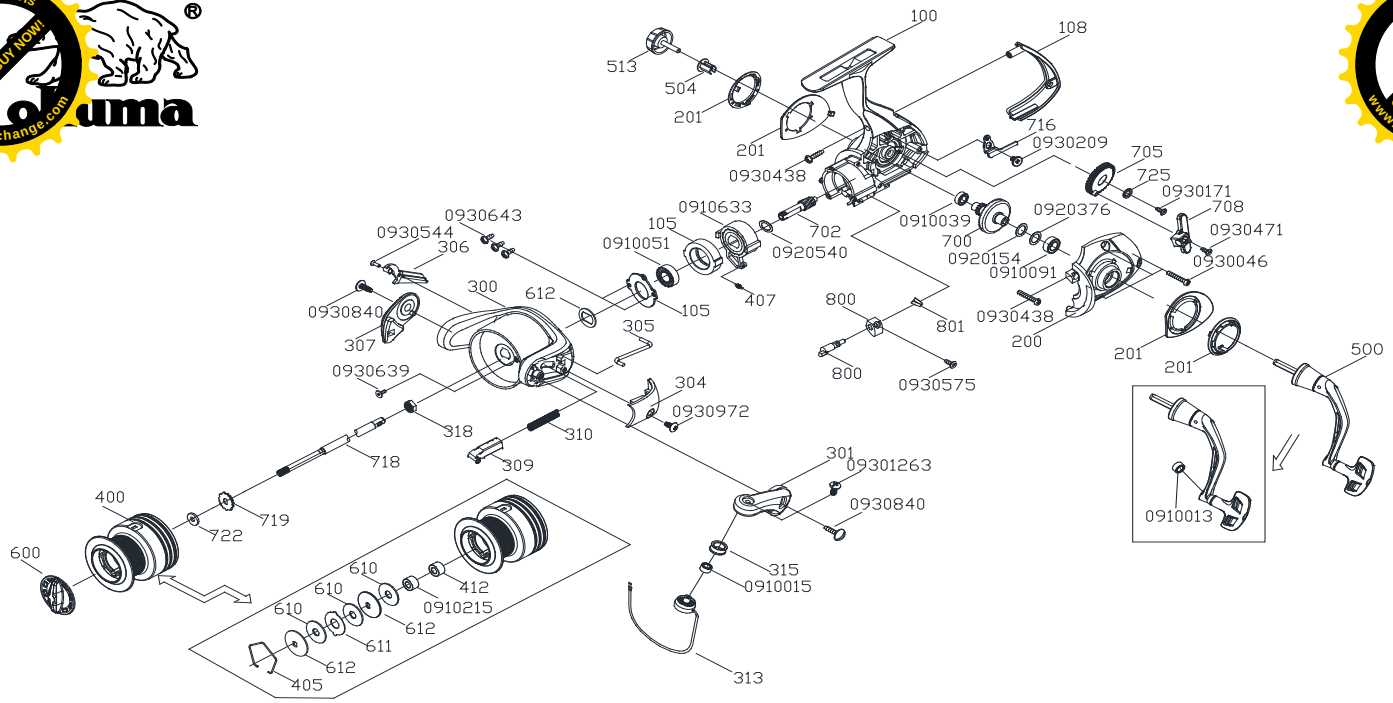


## AV-35b PARTS LIST

| KEY NO | PARTS NO | PARTS NAME | KEY NO | PARTS NO | PARTS NAME |
|---|---|---|---|---|---|
| 100 | 21003657 | Mani body | 702 | 27020903 | Pinion gear |
| 105 | 21050027 | Pinion bearing fixed plate | 705 | 27050105 | Transmission gear |
| 105 | 21056578 | Pin. bearing fixed plate | 708 | 27080095 | Oscillating slider |
| 108 | 21081305 | Cap | 716 | 27160007 | Oscillation slider plate |
| 200 | 22003569 | Side plate | 718 | 27180705 | Main shaft |
| 201 | 22010286 | Main body decoration | 719 | 27190025 | Click gear |
| 201 | 22010287 | Side plate decoration | 722 | 27220009 | Click gear washer |
| 201 | 22010321 | Main body decoration | 725 | 27250020 | Transmission gear bushing |
| 201 | 22010322 | Side plate decoration | 800 | 28000242 | Anti-reverse/anti-re lever |
| 300 | 23003911 | Rotor | 800 | 28000322 | Anti-reverse/anti-re lever |
| 301 | 23011106 | Bail arm | 801 | 28010024 | Anti-re lever spring |
| 304 | 23042402 | Bail arm cover | 0910633 | 0910633 | Ball bearing |
| 305 | 23050146 | Kick lever | 0910051 | 0910051 | Ball bearing |
| 306 | 23060910 | Bail holder cover | 0910091 | 0910091 | Ball bearing |
| 307 | 23071410 | Bail holder | 0910013 | 0910013 | Ball bearing |
| 309 | 23090002 | Bail arm support pin | 0910015 | 0910015 | Ball bearing |
| 310 | 23100005 | Compression spring | 0910039 | 0910039 | Ball bearing |
| 313 | 23131377 | Bail wire assy. | 0910215 | 0910215 | Ball bearing |
| 315 | 23150010 | Line roller | 0920540 | 0920540 | Washer |
| 318 | 23180005 | Rotor nut | 0920154 | 0920154 | Washer |
| 400 | 240011913 | Spool assy. | 0920376 | 0920376 | Washer |
| 405 | 24050042 | Drag washer retainer | 0930046 | 0930046 | Screw |
| 407 | 24070009 | Extension spring | 0930171 | 0930171 | Screw |
| 412 | 24120021 | Spool bushing | 0930471 | 0930471 | Screw |
| 500 | 25009838 | Handle assy. | 09301263 | 09301263 | Screw |
| 504 | 25040004 | Handle screw cap washer | 0930643 | 0930643 | Screw |
| 513 | 25130721 | Handle cap | 0930972 | 0930972 | Screw |
| 600 | 26002903 | Drag knob assy. | 0930840 | 0930840 | Screw |
| 610 | 26100011 | Drag washer | 0930639 | 0930639 | Screw |
| 611 | 26110005 | Eared washer | 0930575 | 0930575 | Screw |
| 612 | 26120006 | Key washer | 0930209 | 0930209 | Screw |
| 612 | 26120054 | Key washer | 0930438 | 0930438 | Screw |
| 612 | 26120007 | Key washer | 0930544 | 0930544 | Screw |
| 700 | 27000322 | Drive gear | | | |

209OKA09301351